Sidekick™ HSD Wheel Guard

Carrying Rear Passengers

The HSD and GSD are designed to carry everyone from small children to adults. In order to safely transport rear passengers, please check the following points, and ensure your bike is equipped with the proper accessories.

Check Local Regulations

⚠ **It may be illegal to carry passengers on a bike in your area even if it has been designed or configured to do so. Check your local regulations before carrying passengers.**

Check Max Gross Vehicle Weight Limits

⚠ **Please follow and check the GSD/HSD manual for the most current information about maximum gross vehicle weight. Most riders can comfortably carry 80% of their weight. You should determine if you are comfortable carrying that much weight.**

Wear a Helmet

Rider and rear passenger(s) are strongly advised to wear an approved helmet.

Do NOT Leave Children Unattended

Do not leave your children unattended on the bike, even if it is on the kickstand. Wriggling children can upset the balance of the bike and a fall may result in serious injuries.

Use Proper Equipment

⚠ **The bike needs to have the following accessories installed in order to safely transport rear passenger(s).**

1. **Proper seating.** Requirements for seating depend on the rear passenger. Please follow the equipment's limits on the passenger's age, weight, and height.
2. **A pair of foot supports.** Passenger must be tall enough so that their feet can lay flat on the footrest. If a child's feet cannot comfortably reach the footrest, please use a child seat instead.
3. **Handholds.** Whenever the bike is in motion, passengers who are not in a child seat must hold on to something stationary.
4. **Foot and leg protection.** Use rear pannier bags or wheel guards to prevent legs, feet, shoelaces, or loose-fitting clothing from getting caught in the spinning wheel.

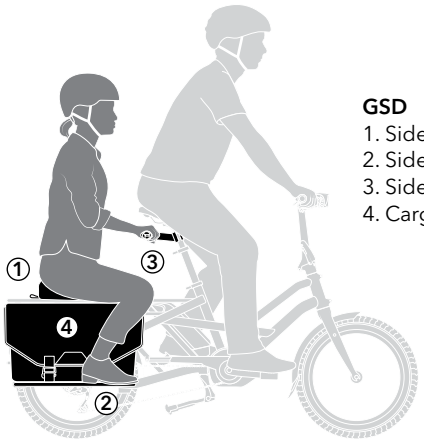

GSD
1. Sidekick Seat Pad
2. Sidekick Lower Deck
3. Sidekick Bars
4. Cargo Hold Panniers

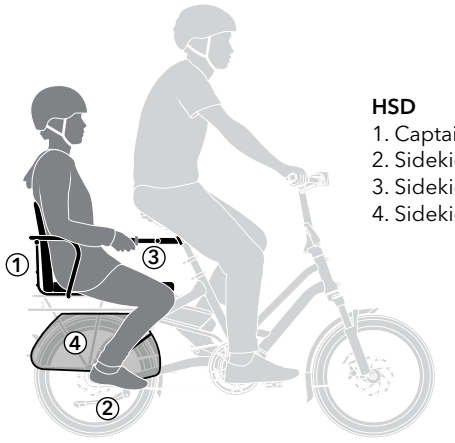

HSD
1. Captain's Chair
2. Sidekick Footrests
3. Sidekick Joyride Bars
4. Sidekick HSD Wheel Guard

The illustrations above show a mix of suggested gear to safely carry passengers.
Your combination of passenger accessories may differ depending on your needs.

Follow Installation Procedures

Check to ensure accessories have been correctly installed and securely fastened.

Use Accessories Properly

Our foot support accessories, including the Sidekick Foot Pegs, Sidekick Footrests, and Sidekick Lower Deck, are strictly for passenger use when SEATED. Standing on them is unsafe and may permanently damage the frame.

Our rear passenger handlebar accessories, including the Sidekick Joyride Bars and the Sidekick Bars, are strictly for passengers to hold. Adding substantial weight on the top of or using the rear passenger handlebars to lift the bike will cause undue stress on the seatpost and handlebar.

Our seat accessories, including the Clubhouse, Sidekick Seat Pad, and Captain's Chair, are strictly for sitting. Using them to lift the bike will damage the frame and accessory.

Scan to view available passenger seating accessories

Sidekick™ HSD Wheel Guard

What's Included

- Sidekick™ HSD Wheel Guard x 2
- Long cable tie x 2
- Short cable tie x 4

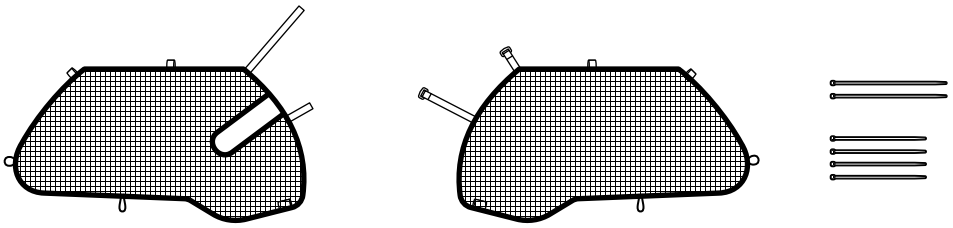

⚠ The wheel guards are not symmetric and each needs to be attached to the proper side. Set both on the ground and take note which side each guard should be installed on.

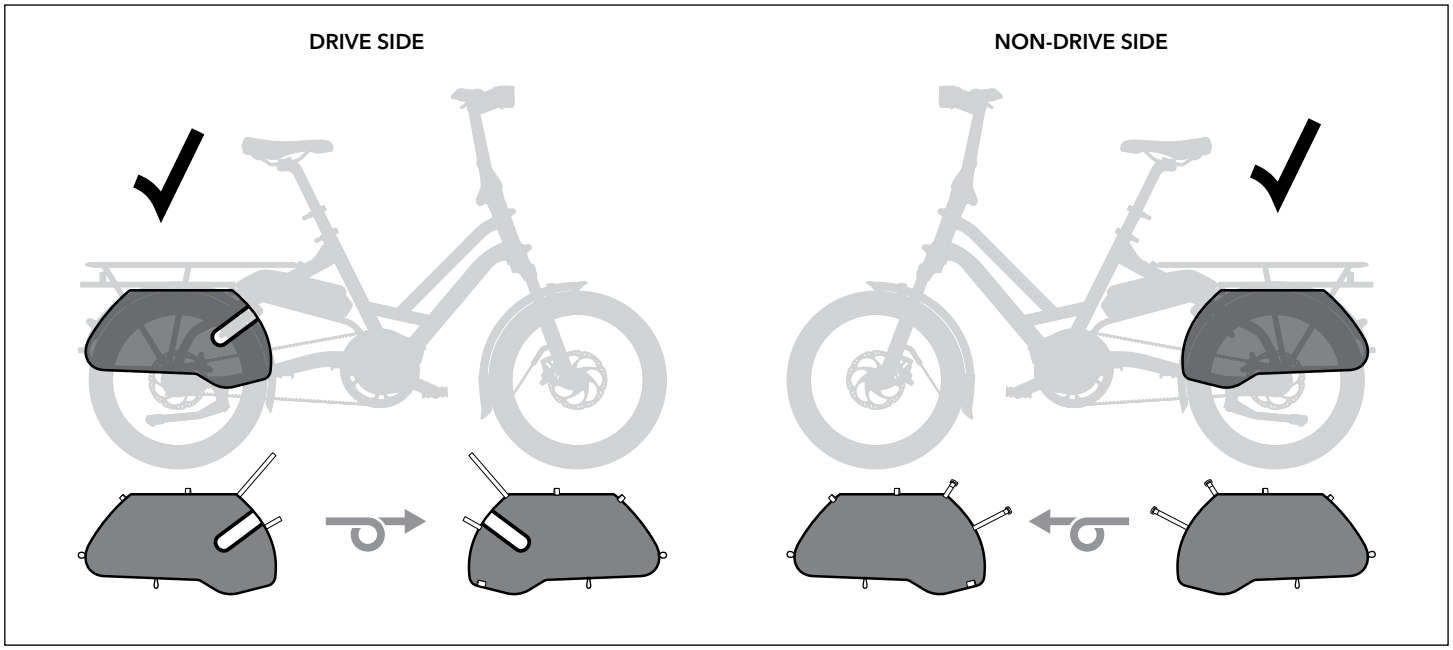

Sidekick™ HSD Wheel Guard

Installation

Tools required (not included)

- Scissors

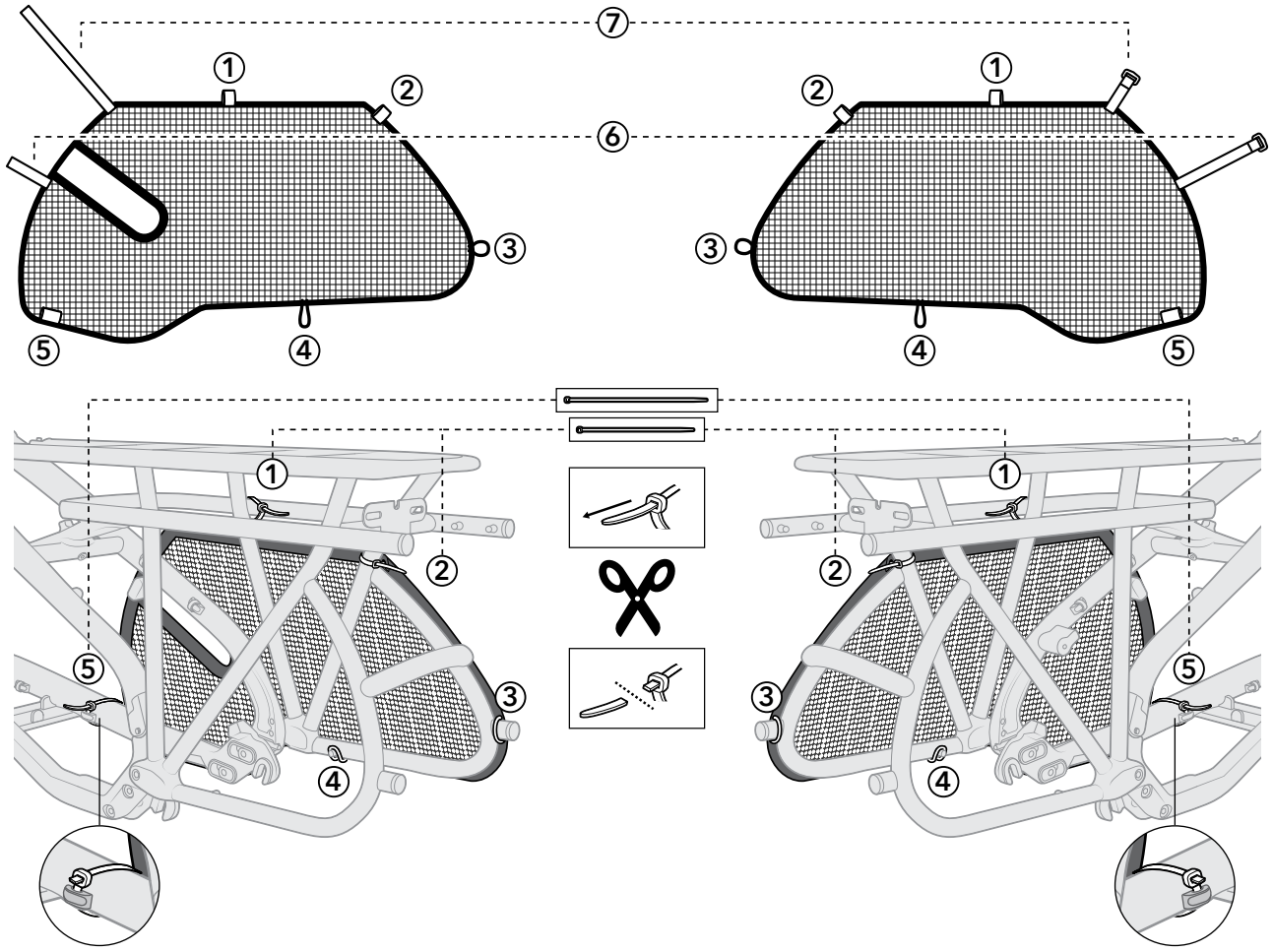

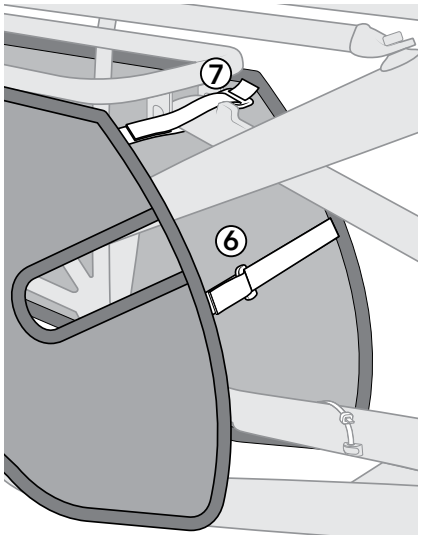

⚠ Warning ⚠

Check to make sure that all straps are tied and secured before riding. Loose straps may cause interference with the wheel.

LIMITED PRODUCT WARRANTY INFORMATION: This Product comes with a ONE (1) YEAR Limited Warranty from the date of retail purchase by the original end-user. If a material or workmanship defect arises and a valid claim is received within the Warranty Period, this Product will be replaced. Mobility Holdings cannot be held liable for damages to personal property due to misuse or improper care and maintenance. This Product Warranty does not, under any circumstance, cover the replacement or cost of any third party product used with or connected to the Product.

Tern, the Tern Werd (logotype), the Tern Berd (device), GSD, HSD, Captain's Chair, Cargo Hold, and Sidekick used alone or in combination are trade names, trade devices or registered trademarks of Mobility Holdings, Ltd.

© 2020 Mobility Holdings, Ltd.